Unilumin

TOGETHER, FOR A BRIGHTER FUTURE

UNILUMIN GROUP CO ., LTD

HQ Address: No. 18 Haoye Road, Fuhai Sub-district, Bao'an District Shenzhen, Guangdong Province, China
Manufacturing Base: No.105 Zhongan Avenue, Minzhong Town, Zhongshan, Guangdong Province, China
TEL: +86-755-29918999 | **FAX:** +86-755-29912092 | **E-mail:** ledlighting@unilumin.com
www.unilumin.com | **www.unilumin-lighting.com**

The product designs and specifications are subject to change without prior notice.
All rights reserved, copy is prohibited without the permission of Unilumin Group Co., Ltd.

Official Website Facebook

LinkedIn Instagram

Published: August 2026

Unilumin

Luminaria
LED

ECOLUZIA



UNILUMIN GROUP CO ., LTD





Ecoluzia Series

Ecoluzia, a self-developed LED street light, combines a die-cast aluminum housing with a whole-piece PC lens to ensure durability and excellent optical performance. Engineered for adaptability, it features a down-opening cover and ±15° angle adjustment, supporting both horizontal and vertical installations. With an IP66 and IK08 protection rating, Ecoluzia stands up to challenging outdoor conditions. Optional NEMA interface and power line communication enable intelligent control, making it a practical and future-ready solution for urban lighting needs.

Features & Benefits

1. Die-cast aluminum housing with integrated full-piece PC lens
2. Down-opening cover design
3. IP66 waterproof and IK08 impact resistant
4. ±15° horizontal and vertical angle adjustment in 5° increments
5. Optional NEMA interface for smart control
6. Compatible with Φ60mm pole diameter

Application

Urban & Residential Street | Pedestrian Path | Park & Square | Rural Road | Bridge

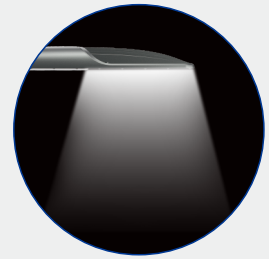

Ultra high efficiency

Delivers up to 210lm/W for maximum energy savings and superior illumination

Smart-ready & future-proof

NEMA interfaces are optional



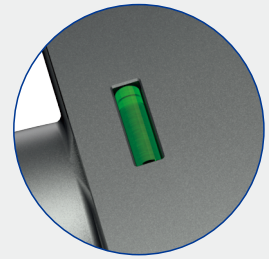

Built-in Level

Enables quick and accurate installation

Flexible mounting angle adjustment

Achieve the ideal installation angle to suit your needs

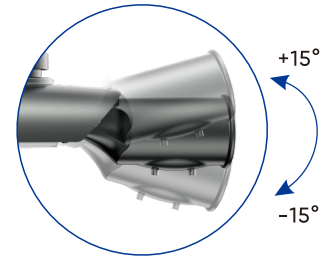

Light Distributions

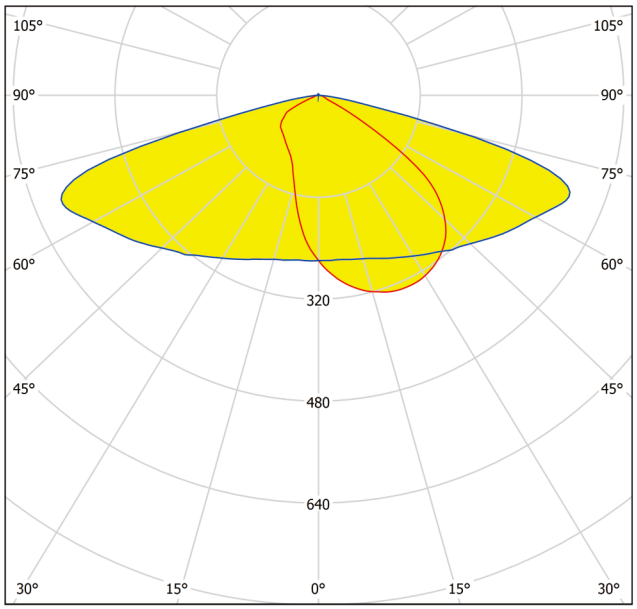

1057-5050-T2M

Dimensions

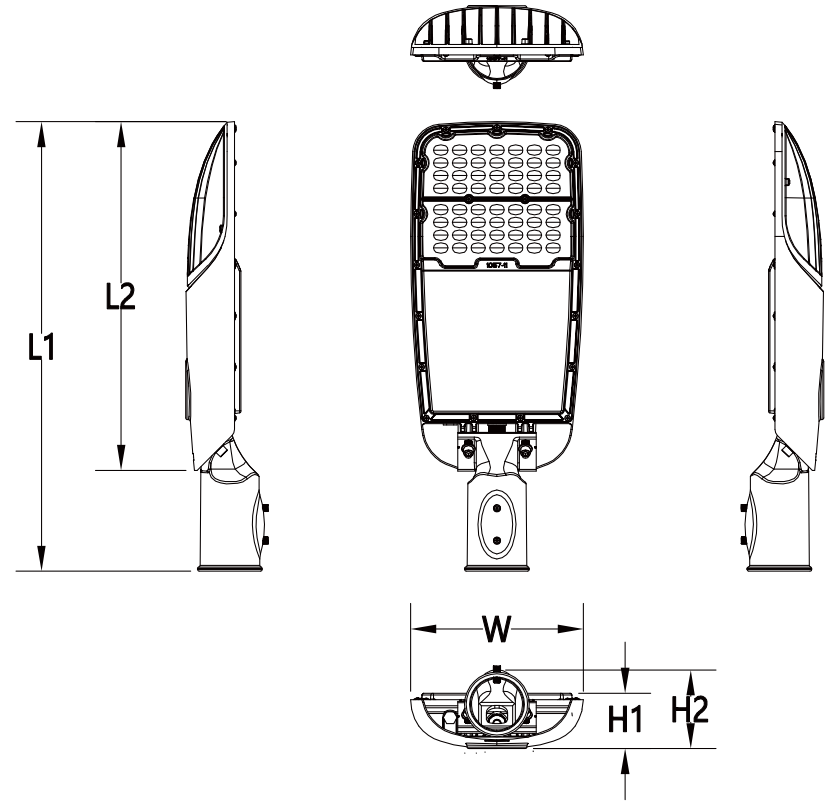

Model	Dimension (mm)				
	L1	L2	W	H1	H2
STF3-1	413	295	158	63	94
STDF3-2	468	350	173	63	94
STDF3-3	529	410	203	65	93
STDF3-4	628	510	210	65	94
STDF3-5	688	570	276	68	95

Parameters

Product Model	UNI-STF3-1-20	UNI-STF3-2-40	UNI-STF3-3-60	UNI-STF3-4-100	UNI-STF3-5-150	UNI-STF3-5-200
Input Voltage	AC100-277V 50/60Hz					
Power (W)	20	40	60	100	150	200
Power Factor	≥0.92	≥0.95	≥0.95	≥0.95	≥0.95	≥0.95
Luminous Flux (lm)	3800	7600	11400	19000	28500	38000
Luminous Efficacy	190lm/W					
LED	Chinese Brand 5050					
Driver	Moso/Inventronics/Sosen					
CCT	3000K/4000K/5000K/5700K/6500K					
CRI	> 70					
Working Temp.	- 40 °C ~ 45 °C					
Working Humidity	10 % ~ 90 % RH					
Housing Materials	Die-casting aluminum+ Whole PC lens+ Adjustable angle adaptor					
IP/IK Grade	IP66/IK08					
Life Span (Hrs)	100,000					
Max Projected Area (m^2)	0. 05	0. 07	0. 09	0. 11	0. 16	0. 16
Product Dimension (mm)	413×158×94	468×173×94	529×203×93	628×210×94	688×276×95	
Packing Dimension (mm)	475×215×260 2PCS/carton	530×235×260 2PCS/carton	600×275×260 2PCS/carton	700×275×260 2PCS/carton	770×345×275 2PCS/carton	
Net Weight(kg)	1.9±0.5	2.2±0.5	2.6±0.5	3.1±0.5	5.5±0.5	

Note: The tolerance of Luminous Flux is ±7%

Adapter



- Dual-purpose spigots for side entry and post top installation -15°to + 15° maximum tilt steps in 5°
- Constructed from robust die-casting aluminum
- Stainless steel bolts
- 60 mm diameter options cater for existing or newly fabricated light poles

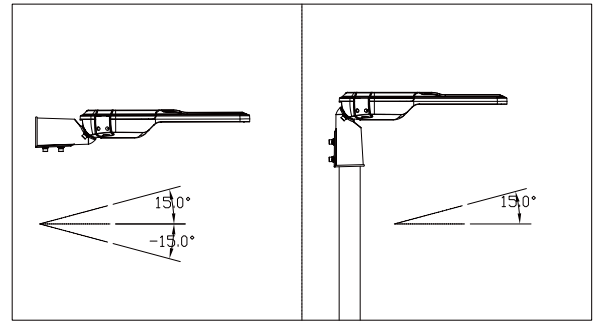

Controller



NEMA Control

Features

- With PWM and 0-10V dimming interfaces
- Acquiring data like current, voltage, power and power factor
- Analyzing and reporting of power consumption and energy saving
- Monitoring and detecting the status of LED luminaire
- Automatic faulty reporting function
- With surge protection
- IP65 rated

Communication Interface	Communication Method	Communication Distance	Dimming Signal
NEMA	LoRa / ZigBee NB / 4G LTE	LoRa: 1000M; ZigBee: 200M NB: ∞; 4G LTE: ∞	PWM 0-10v
ZHAGA	NB / 4G LTE	NB: ∞; 4G LTE: ∞	DALI 0-10v



